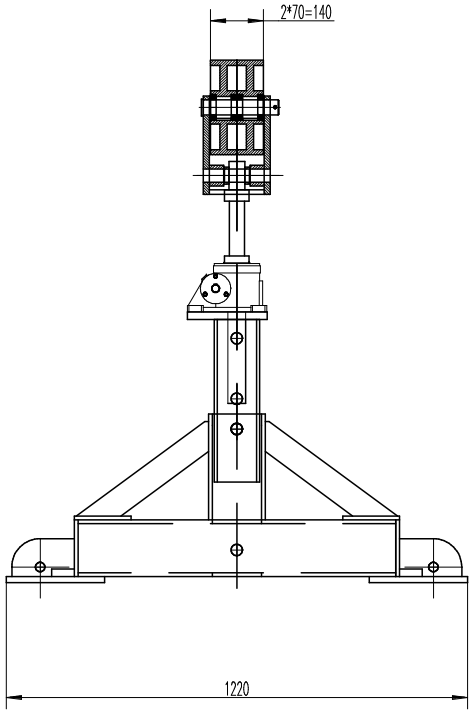

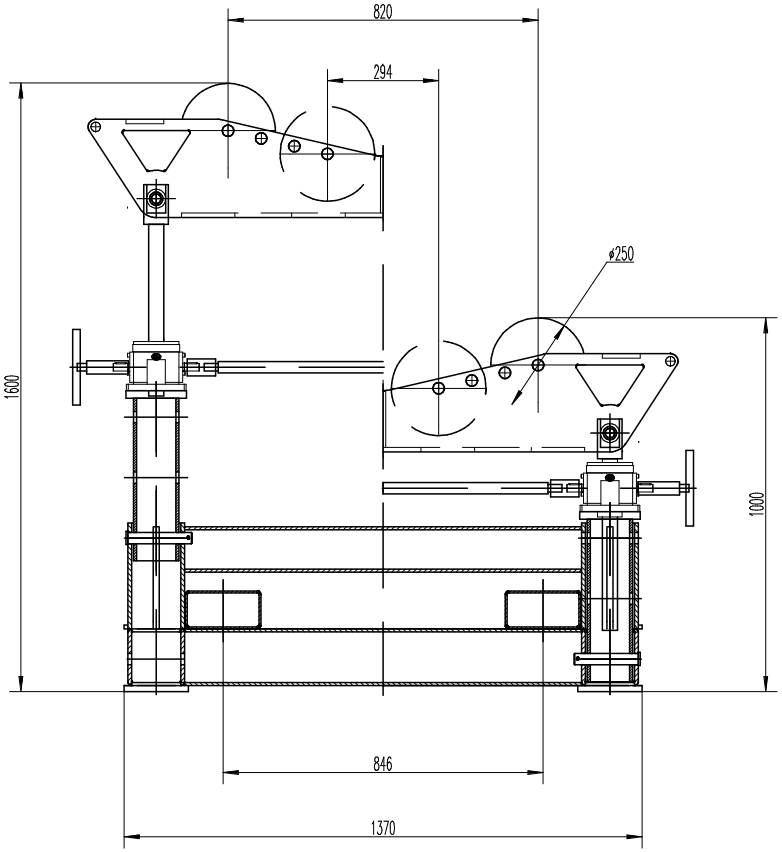

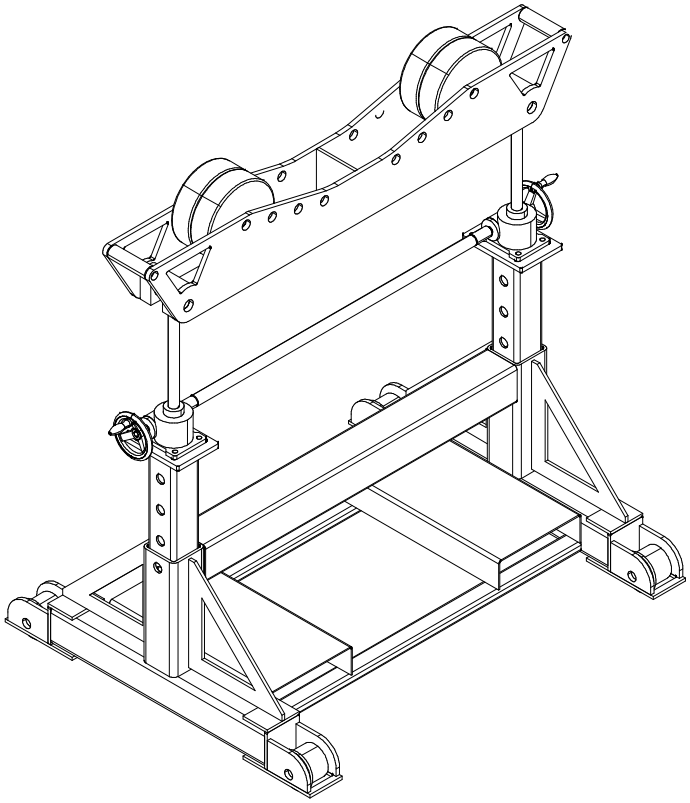

Model IPS - 8 MT

Load Capacity: 8 MT

Diameter Range: 50-1,500 mm

Height Adjustment: 1000 - 1600 mm, increments of 100 mm

Fine Adjustment: 300 mm

PU Wheels: 250 mm (Ø) x 140 mm (W)

Self Levelling Flat Feet

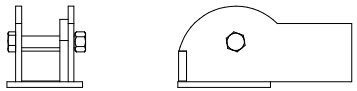

Rail Wheels (24 kg/m)

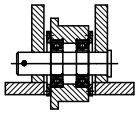

Making	Num	Item name	Sign	Date	IRIZAR IDLER PIPE STANDS DRAWING	IPS – 8 MT
Design		Standardize				Drawing marking / quati. / weight / scale
Check						Total: (page) Page:
Examine		Approval				Irizar Heavy Industries Inc
		Date				