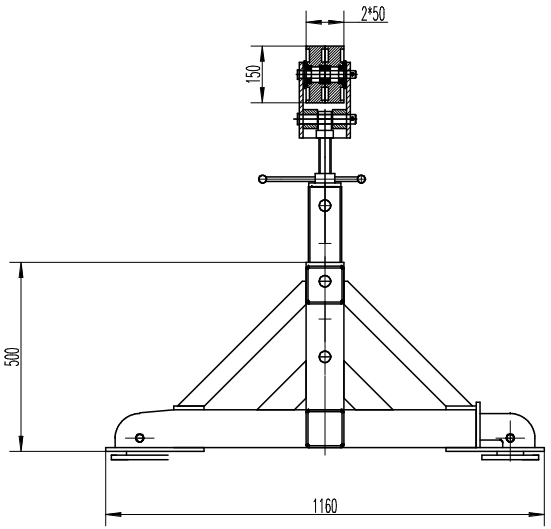

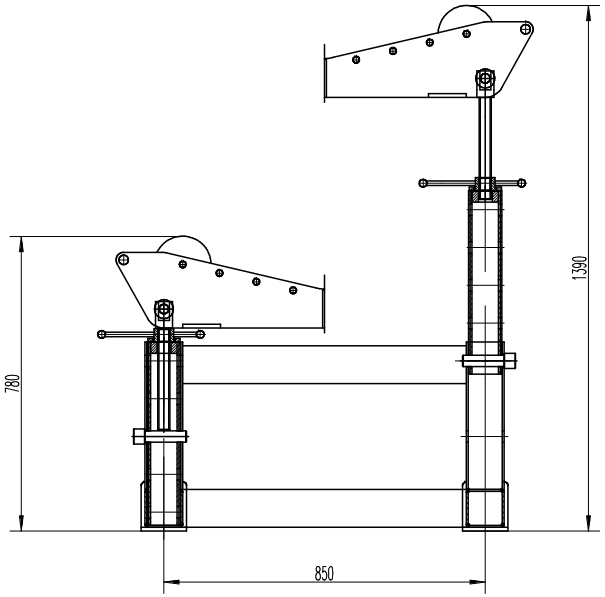

Self Levelling Flat Feet

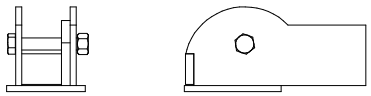

Caster Wheels

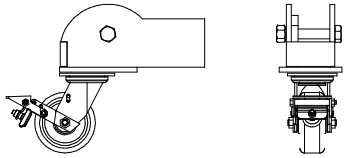

Rail Wheels (1", 2", and 3" Steel Angle)

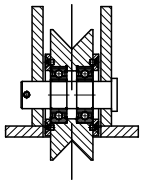

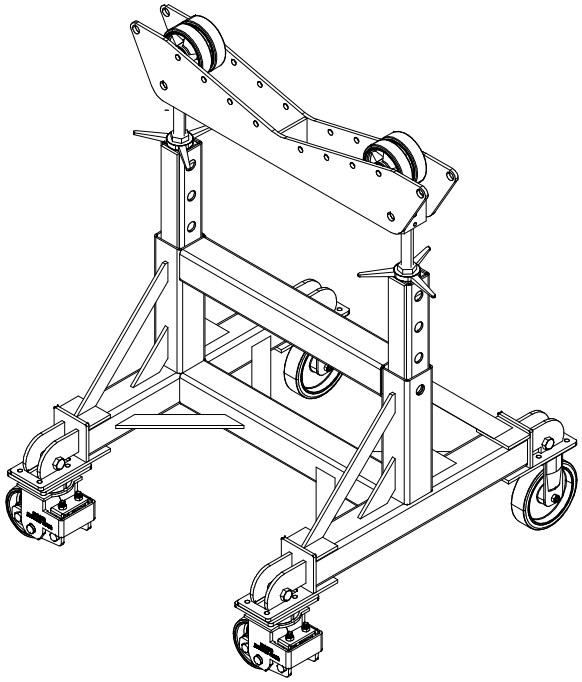

Model IPS - 2 MT

Load Capacity: 2 MT

Diameter Range: 50-1,500 mm

Height Adjustment: 780 - 1,390 mm, increments of 100 mm

Fine Adjustment: 200 mm

PU Wheels: 150 mm (Ø) x 80 mm (W)

Making	Num	Item name	Sign	Date	IRIZAR IDLER PIPE STANDS DRAWING	IPS - 2 MT
Design		Standardize				Drawing marking / quati. / weight / scale
Check						Total: (page) Page:
Examine		Approval				Irizar Heavy Industries Inc
		Date				