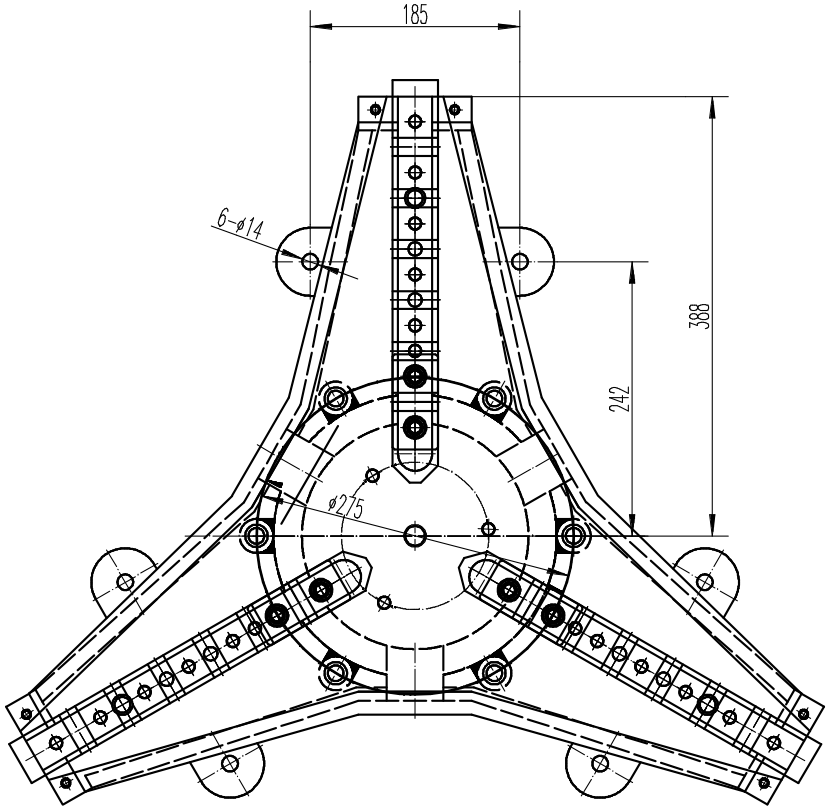

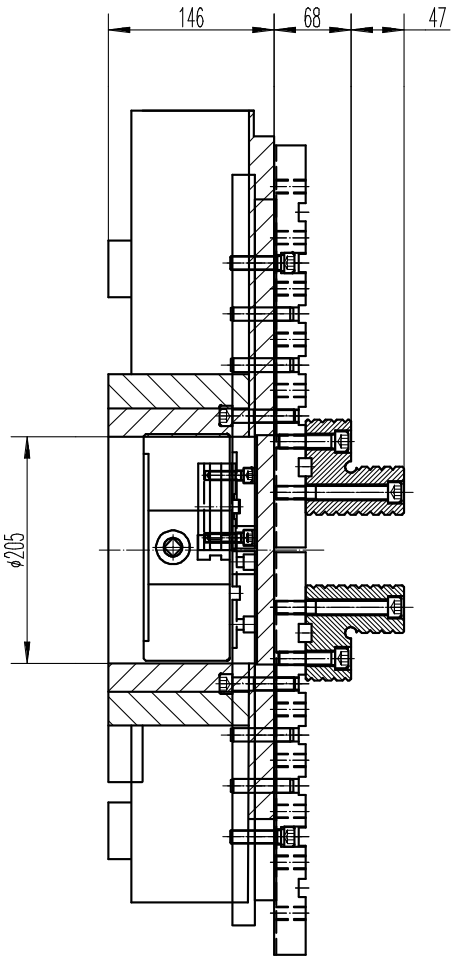

Three Jaw Self Centering Welding Gripper Chuck Model 3J-615-1T

Inner Jaw Clamping Range OD: 85 – 530 mm

Outer Jaw Clamping Range OD: 170-615 mm

Max load capacity: 1 MT @ 5″ from table surface

Max In Torque (N-m): 250

Max Clamp Force (kN): 35

Mounting holes (mm): M12*150 @ Nos 6

Swing diameter: 750 mm

Weight: 68 kg

Marking	Num	Item name	Sign	Date	WELDING GRIPPER CHUCK DRAWING	Model 3J-615-1T
Design		Standardize				Drawing marking / quati. / weight / scale
Check						Total: (page) Page:
Examine		Approval				Irizar Heavy Industries Inc
		Date				